Namiti S.r.l. - P. Iva 06162571217 - N. Rea: 799272
Sede leg.: Via Cortile, 16 - 80069 Vico Equense (NA)
Sede Op.: Corso Italia, 192 - 80063 Piano di Sorrento (NA)
Email: vendite@holity.com / Tel. 0818087452

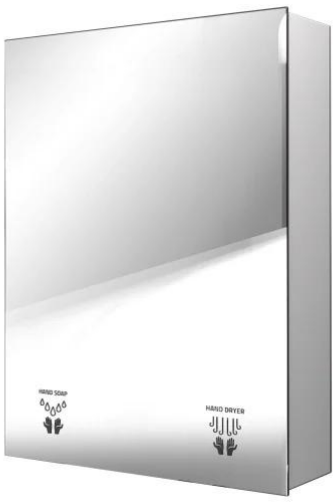

Multifunction mirror with electric hand dryer and photocell dispenser 54x16x72 h586_45

Multifunction mirror for public bathrooms with 900W hand dryer and photocell dispenser. Melamine and safety glass structure.

The **integrated public bathroom system** is a multifunction mirror ideal for installation in professional contexts, high-traffic areas, and high-risk environments subject to possible vandalism. Solving the problem of hygiene management, limited space, and frequent cleaning of the washbasin area, this **multifunction system for public bathrooms** combines automatic detergent dispensing via photocell, ultra-fast air drying, and LED ambient lighting into a single cabinet with a front mirror. It is perfect for managers of public facilities and commercial premises looking for a robust, practical, and easy-to-sanitize solution.

Technical specifications

- **Type:** Multifunction mirror / Integrated system for public bathroom
- **Structure:** Cabinet in melamine and safety glass, with frameless front mirror
- **Colors and finishes:** Matte white (RAL9016)
- **Dimensions (cabinet and mirror):** Cabinet 54 x 16 x H72 cm (54x16x72 cm); front mirror 540 x 720 mm (with Ø 5 mm fixing holes)
- **Lighting:** Automatic LED ambient light activation
- **Electric hand dryer:** Ultra-fast, power supply 230 VAC, 50 Hz, power 900 W
- **Detergent dispenser:** Automatic dispensing activated by photocell
- **User signaling:** Backlit LED pictograms for intuitive use
- **Electrical preparation:** Connection to the 230V line at the customer’s expense, positionable behind the mirror via a flush-mounted box
- **Installation:** Wall mounting via n°2 wall plugs (not included in the package; choose plugs suitable for the type of masonry; screw hole diameter: 6 mm)
- **Maintenance and cleaning:** Periodic check of the correct fixing of the accessories. Carry out adequate cleaning with soap and water and periodic disinfection. Do not use aggressive, abrasive, corrosive products, alcohol, acids, acetone or thinners. Do not scratch
- **Certifications and compliance:** TÜV UNI EN ISO 9001 system certification; CE declaration of conformity to the Low Voltage Directive 35/2014; CE declaration of conformity to the Electromagnetic Compatibility Directive 30/2014

** Image purely indicative*

INFORMATION

- **Punti di forza** With mirror
- **Funzioni erogate** Sapone e Aria

Multifunction mirror with electric hand dryer and photocell dispenser 54x16x



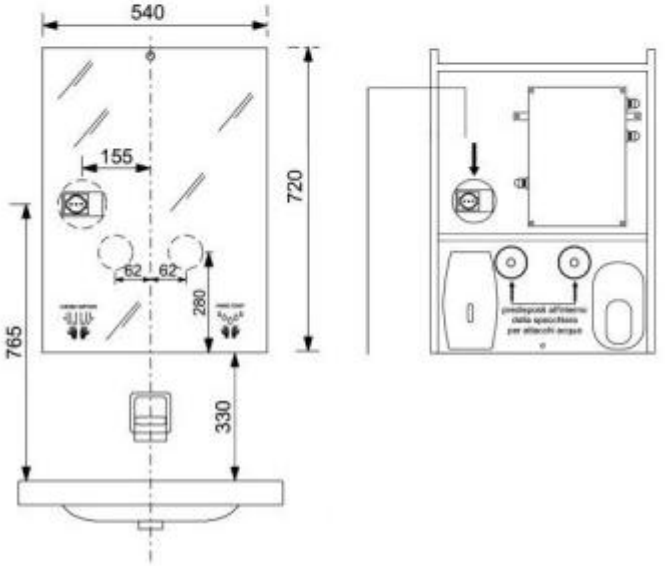

Multifunction mirror with electric hand dryer and photocell dispenser 54x16x72 h586_45

: Sapone e Aria